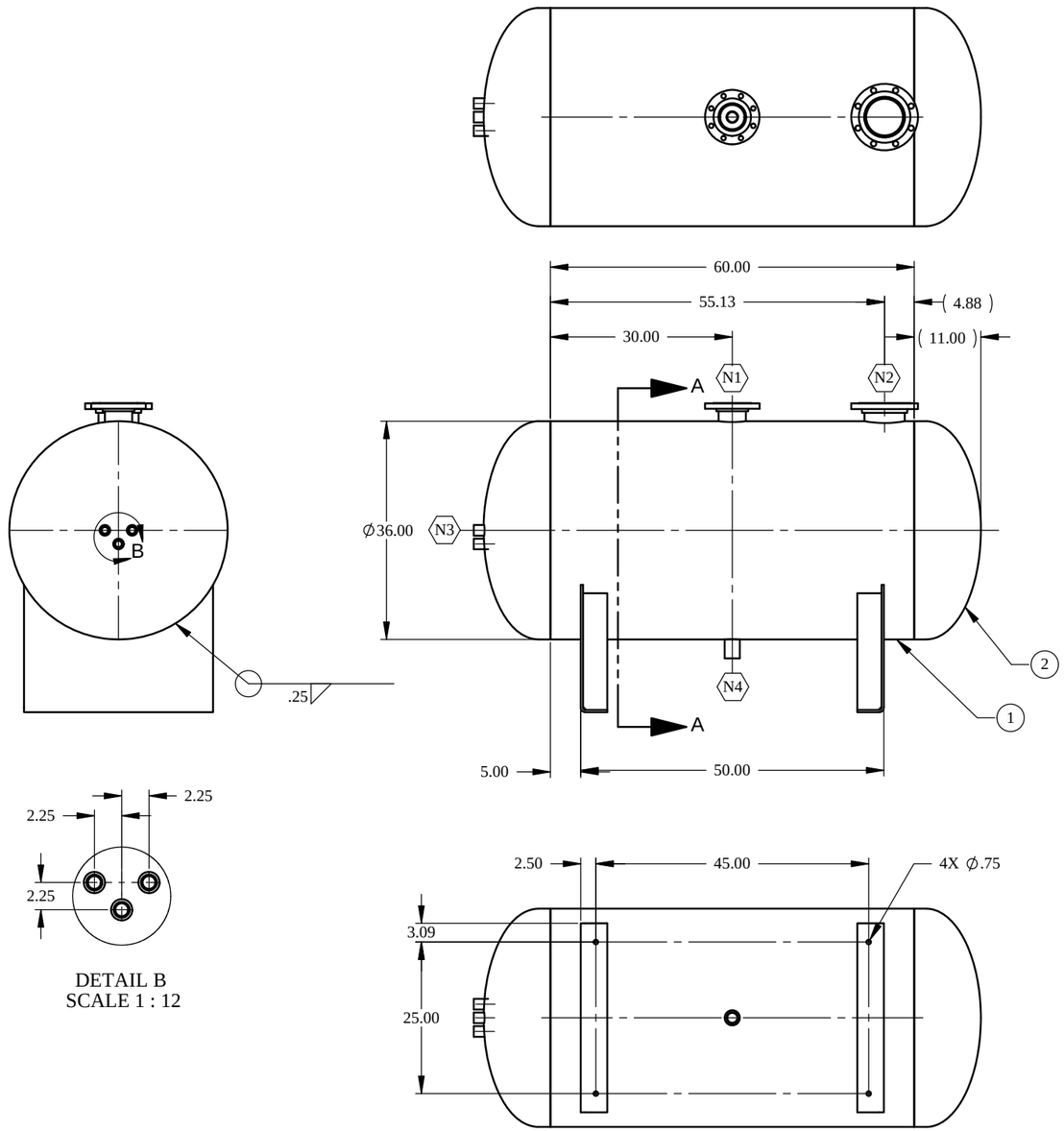


DETAIL B
SCALE 1 : 12

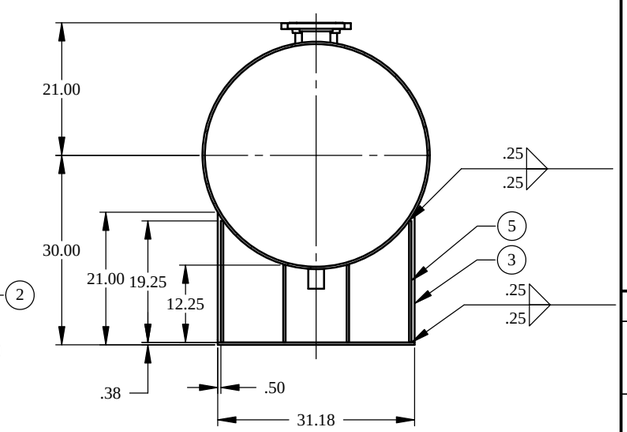


SECTION A-A
SCALE 1 : 24

## BILL OF MATERIALS

| ITEM | QTY | DESCRIPTION | MATERIAL |
|---|---|---|---|
| 1 | 1 | Shell - 0.375 Thk | SA-414 Gr G |
| 2 | 2 | Head - 36.00 OD, SE 2:1, 2.00 SF, .313 Thk, .281 MAF | SA-414 Gr G |
| 3 | 2 | Saddle - .38 Thk, Formed | SA-36 |
| 4 | 4 | Saddle Rib - .38 Thk x 4.00 x 19.25 | SA-36 |
| 5 | 4 | Saddle Rib - .38 Thk x 4.00 x 12.25 | SA-36 |
| 6 | 1 | Full Coupling, B16.11 NPT - 3000#, 1.50 NPS | SA-105 |
| 7 | 1 | Flange, B16.5 RFSO - 150#, 4.00 NPS | SA-105 |
| 8 | 1 | Pipe - Sch. Std., 4.00 NPS | SA-106 Gr. B |
| 9 | 3 | Full Coupling, B16.11 NPT - 3000#, 1.00 NPS | SA-105 |
| 10 | 1 | Pipe - Sch. Std., 6.00 NPS | SA-106 Gr.B |
| 11 | 1 | Flange, B16.5 RFSO - 150#, 6.00 NPS | SA-105 |

## NOTES:

1. All dimensions in inches.
2. All welds shall be neat in appearance, free from slag and other defects.
3. Vessel to be cleaned of scale, oil,weld spatter and all other foreign material, prior to hydrostatic test.
4. Remove all sharp edges on nozzles (1/8" minimum radius)
5. All nozzles to support nominal loads only.
6. Maximum misalignment of butt joints is limited to .25T (Category A, B, C, D up to 1/2" thick)
7. All couplings to conform to B16.11 (2011 Add.) standards.
8. All flanges to conform to B16.5 (2009 Add.)/ B16.47 standards.
9. Flange bolt holes to straddle natural centre lines.

See drawing PVE-6847-Generic Vessel for CRN information

## DESIGN DATA

| | | |
|---|---|---|
| **Code** | Design Code: | **ASME VIII-1 2010 ed. 2011 add.** |
| | Seismic Code: | **NBC Canada 2005, La Malbaie, QC** |
| | Wind Code: | **NBC Canada 2005, Cape Race, NL** |
| **Design Conditions** | MAWP - Int / Ext: | **180 psi @ 200°F** |
| | MDMT: | **-10°F @ 180 psi** |
| | Corrosion Allowance: | **0 in, For Non-corrosive service** |
| **Examination** | Impact Testing: | **Exempt per UCS-66** |
| | Radiography: | **None** |
| | PWHT: | **None** |
| | Hydro Test: | **234 psi @ 70°F** |
| **Service** | Fluid: | **Air / Water / Steam** |
| | Capacity: | **43 cu ft** |
| | Weight - Empty: | **1200 lb max** |
| | Weight - Operating: | **4000 lb max** |

## REVISIONS

| REV. | REVISION HISTORY | DATE | DRW | CHK |
|---|---|---|---|---|
| 0 | Release | 5/21/2013 | TSB | LB |

## NOZZLE SCHEDULE

| NOZZLE | | | | | WELDS | | | | | | FLANGES | | | | | BOM ITEM # |
|---|---|---|---|---|---|---|---|---|---|---|---|---|---|---|---|---|
| Mark | Size | Qty | Sch. | Service | Type | 41 | 42 | 43 | Int Proj | Ext Proj | Type | CL | SB | F1 | F2 | |
| N1 | 4.00 | 1 | 40 | - | UW-16.1(c) | .250 | - | - | - | 3.00 | RFSO | 150 | .362 | .237 | .332 | 6,7 |
| N2 | 6.00 | 1 | 40 | - | UW-16.1(c) | .313 | - | - | - | 3.00 | RFSO | 150 | .405 | .250 | .392 | 9,10 |
| N3 | 1.00 | 3 | 3000 | - | UW-16.2(k) | .250 | - | - | .50 | A/R | - | - | - | - | - | 8 |
| N4 | 1.50 | 1 | 3000 | - | UW-16.2(L) | .313 | - | - | - | - | - | - | - | - | - | 5 |

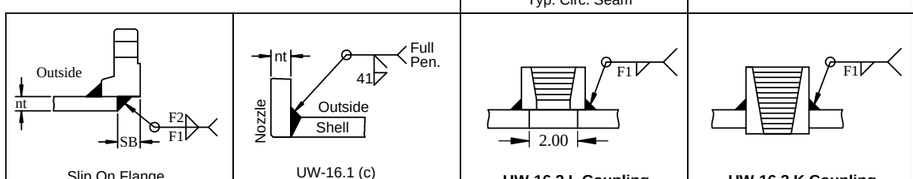



PV Eng
**Pressure Vessel Engineering, Ltd.**
120 Randall Drive, Suite B
Waterloo, Ontario, Canada
N2V 1C6
www.pveng.com
info@pveng.com
Tel. 519-880-9808
Fax 519-880-9810


Title
# 36 X 60 Vessel

| Size | Job ID | Drawing No. | Revision: |
|---|---|---|---|
| B | PVE-6847 | PVE-6847-0.0-Mfg Vessel | 0 |

| Scale | Material | Sheet |
|---|---|---|
| 1:1 | See BOM | 1 OF 1 |


This drawing and the information herein is confidential, and must not be reproduced or used in any way without the written permission of Pressure Vessel Engineering Ltd.